

Vento Expert A100-1 S W

Single-room ERV | 32 CFM | Wi-Fi

- Heat exchanger type: Reversible
- Heat exchanger material: Enthalpy
- Filter: MERV 5 (optionally MERV 13 filter)
- Sound-insulated casing
- Enthalpy heat exchanger
- Control: Remote Control, Built-in control panel, Smartphone
- Casing material: Plastic
- Humidity sensor

	Unit of measurement	Vento Expert A100-1 S W			
Phases	-	1			
Minimum supply voltage	V	100			
Maximum supply voltage	V	240			
Power supply frequency	Hz	50/60			
Rated power	W	3.20	4.00	6.60	18.00
Maximum unit current	A	0.037	0.046	0.071	0.151
Air flow in ventilation mode	CFM	11	18	34	64
Air flow in heat recovery mode	CFM	5	9	17	32
Rotation speed at 60hz	-	780	1100	1920	2940
Sound level	Sones	0.2	0.4	2.2	5.0
Heat recovery efficiency, max	%	87			
Heat exchanger type	-	Reversible			
Heat exchanger material	-	Enthalpy			
Filter	-	MERV 5 (optionally MERV 13 filter)			
Transported air temperature (max)	°C	40			
Transported air temperature (min)	°C	-20			
Ingress protection rating	-	IP24			
Minimum wall thickness	in	10			
Maximum wall thickness	in	19 3/4			

Dimensions

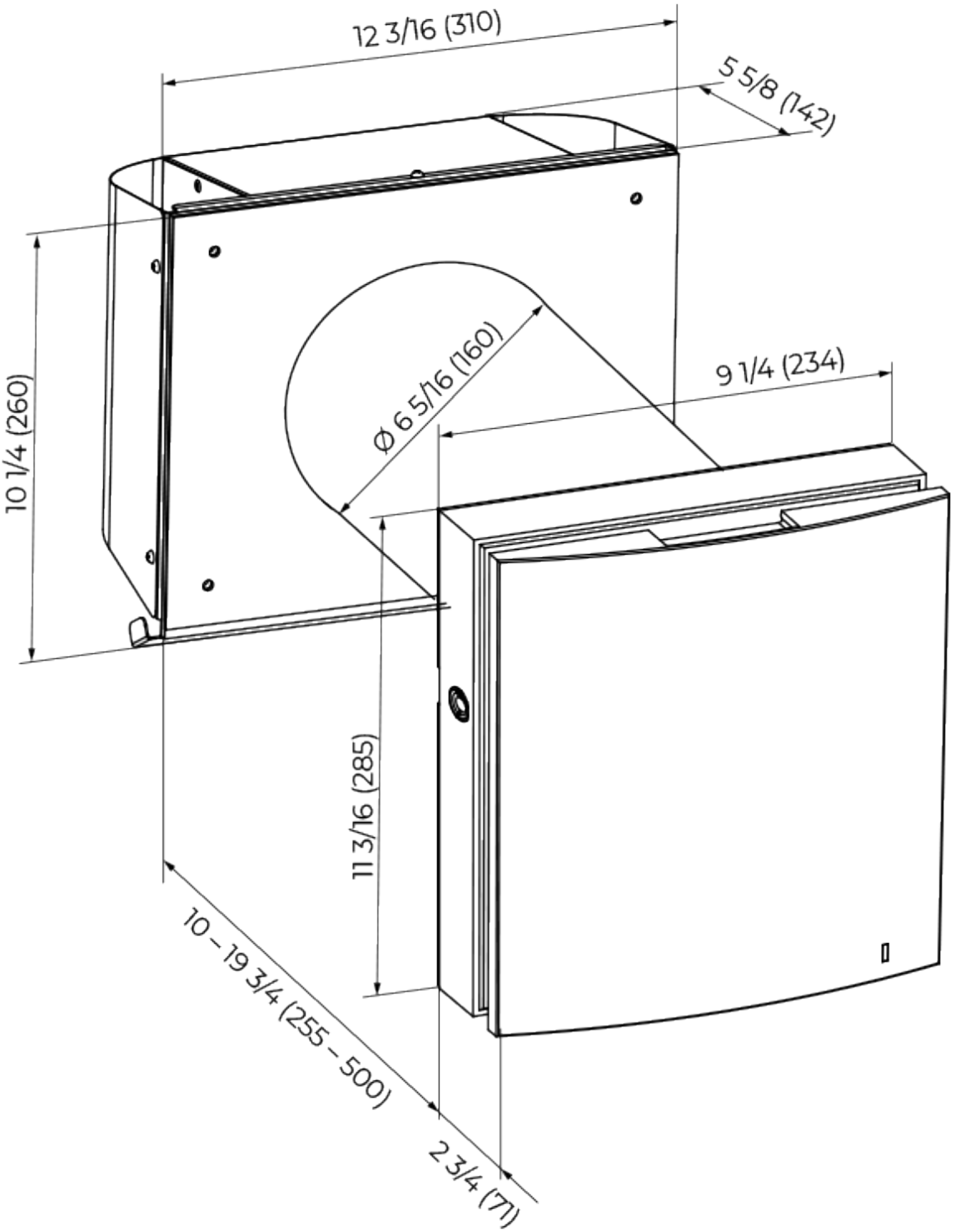
12 3/16 (310)
5 5/8 (142)
10 1/4 (260)
Ø 6 5/16 (160)
9 1/4 (234)
11 3/16 (285)
10 – 19 3/4 (255 – 500)
2 3/4 (71)