

# Vento Expert A50-1 S Pro

Single-room ERV | 15 CFM

- Heat exchanger type: Reversible
- Heat exchanger material: Ceramic
- Filter: MERV 5 (optionally MERV 13 filter)
- Sound-insulated casing
- Enthalpy heat exchanger
- Control: Remote Control, Built-in control panel
- Casing material: Plastic
- Humidity sensor

| | Unit of measurement | Vento Expert A50-1 S Pro | | |
|---|---|---|---|---|
| Phases | - | 1 | | |
| Minimum supply voltage | V | 100 | | |
| Maximum supply voltage | V | 240 | | |
| Power supply frequency | Hz | 50/60 | | |
| Rated power | W | 3.61 | 4.15 | 5.20 |
| Maximum unit current | A | 0.025 | 0.030 | 0.039 |
| Air flow in ventilation mode | CFM | 9 | 18 | 30 |
| Air flow in heat recovery mode | CFM | 4 | 9 | 15 |
| Rotation speed at 60hz | - | 800 | 1300 | 1900 |
| Sound level | Sones | 0.6 | 1.0 | 1.2 |
| Heat recovery efficiency, max | % | 93 | | |
| Heat exchanger type | - | Reversible | | |
| Heat exchanger material | - | Ceramic | | |
| Filter | - | MERV 5 (optionally MERV 13 filter) | | |
| Transported air temperature (max) | °C | 40 | | |
| Transported air temperature (min) | °C | -20 | | |
| Ingress protection rating | - | IP24 | | |
| Minimum wall thickness | in | 5 7/8 | | |

## Dimensions

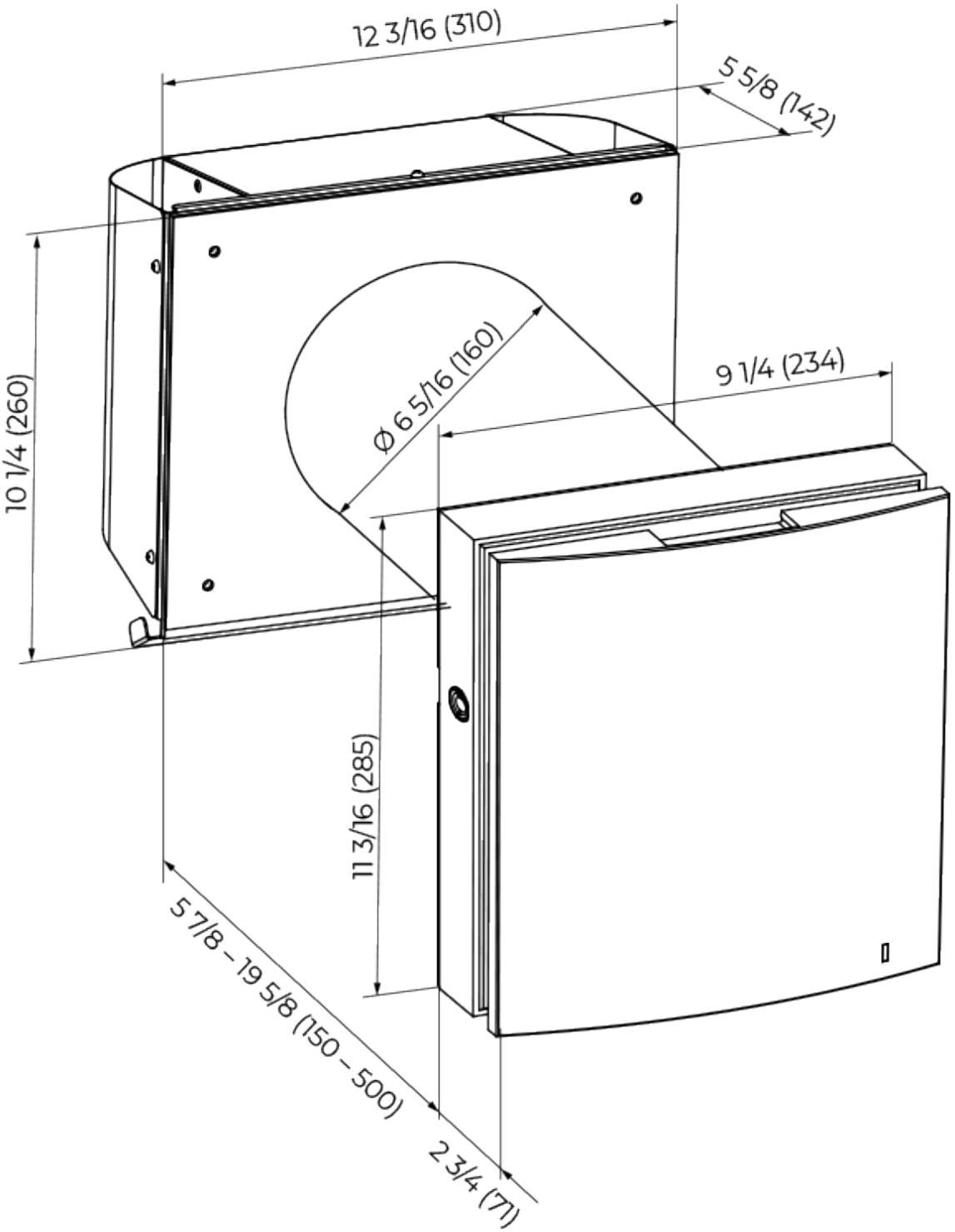
12 3/16 (310)
5 5/8 (142)
10 1/4 (260)
Ø 6 5/16 (160)
9 1/4 (234)
11 3/16 (285)
5 7/8 – 19 5/8 (150 – 500)
2 3/4 (71)