

Vento Expert A50C3-1 Pro

Single-room ERV | 15 CFM | Cold Climate

- Heat exchanger type: Reversible
- Heat exchanger material: Enthalpy
- Filter: MERV 5
- Sound-insulated casing
- Enthalpy heat exchanger
- Control: Remote Control, Built-in control panel
- Casing material: Plastic
- Humidity sensor
- For cold climate

	Unit of measurement	Vento Expert A50C3-1 Pro		
Phases	-	1		
Minimum supply voltage	V	100		
Maximum supply voltage	V	240		
Power supply frequency	Hz	50/60		
Rated power	W	4.45	5.08	7.06
Maximum unit current	A	0.035	0.040	0.059
Air flow in ventilation mode	CFM	9	18	30
Air flow in heat recovery mode	CFM	4	9	15
Rotation speed at 60hz	-	800	1300	1900
Sound level	Sones	0.6	1.0	1.4
Heat recovery efficiency, max	%	93		
Heat exchanger type	-	Reversible		
Heat exchanger material	-	Enthalpy		
Filter	-	MERV 5		
Transported air temperature (max)	°C	40		
Transported air temperature (min)	°C	-25		
Ingress protection rating	-	IP24		
Minimum wall thickness	in	9 1/2		

Dimensions

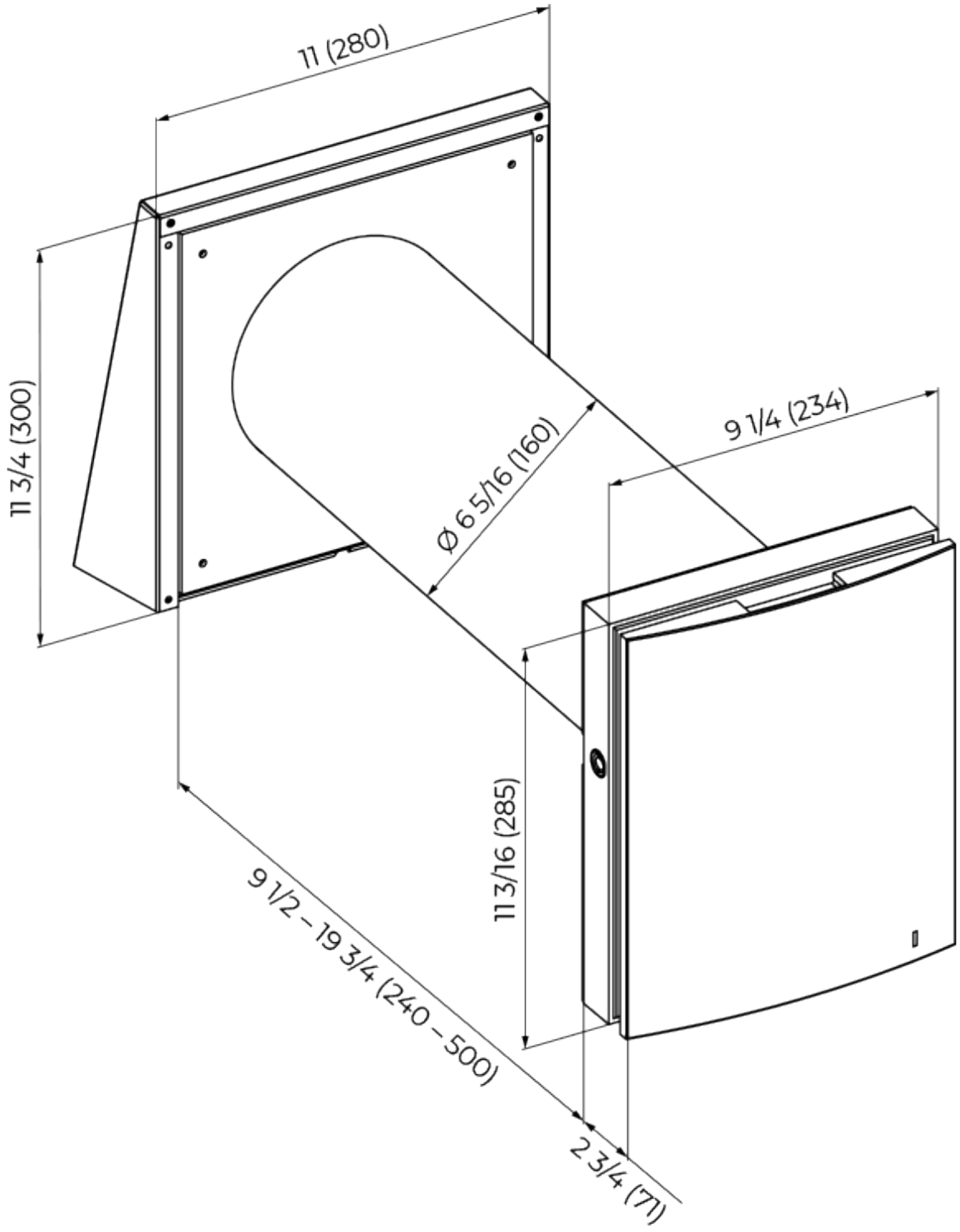
11 (280)
11 3/4 (300)
Ø 6 5/16 (160)
9 1/4 (234)
11 3/16 (285)
9 1/2 – 19 3/4 (240 – 500)
2 3/4 (71)