

Vento Expert DUO A30-1 S W

Single-room ERV | 18 CFM | Wi-Fi | Dual-Flow

- Heat exchanger type: Reversible
- Heat exchanger material: Ceramic
- Filter: MERV 5
- Sound-insulated casing
- Control: Remote Control, Built-in control panel, Smartphone
- Casing material: Plastic
- Humidity sensor

	Unit of measurement	Vento Expert DUO A30-1 S W		
Phases	-	1		
Minimum supply voltage	V	100		
Maximum supply voltage	V	240		
Power supply frequency	Hz	50/60		
Rated power	W	2.17	3.66	6.62
Maximum unit current	A	0.026	0.039	0.066
Air flow in ventilation mode	CFM	6	12	18
Air flow in heat recovery mode	CFM	6	12	18
Rotation speed at 60hz	-	1600	2200	2500
Sound level	Sones	1.2	2.0	2.5
Heat recovery efficiency, max	%	85		
Heat exchanger type	-	Reversible		
Heat exchanger material	-	Ceramic		
Filter	-	MERV 5		
Transported air temperature (max)	°C	40		
Transported air temperature (min)	°C	-20		
Ingress protection rating	-	IP24		
Minimum wall thickness	in	11 3/4		

Dimensions

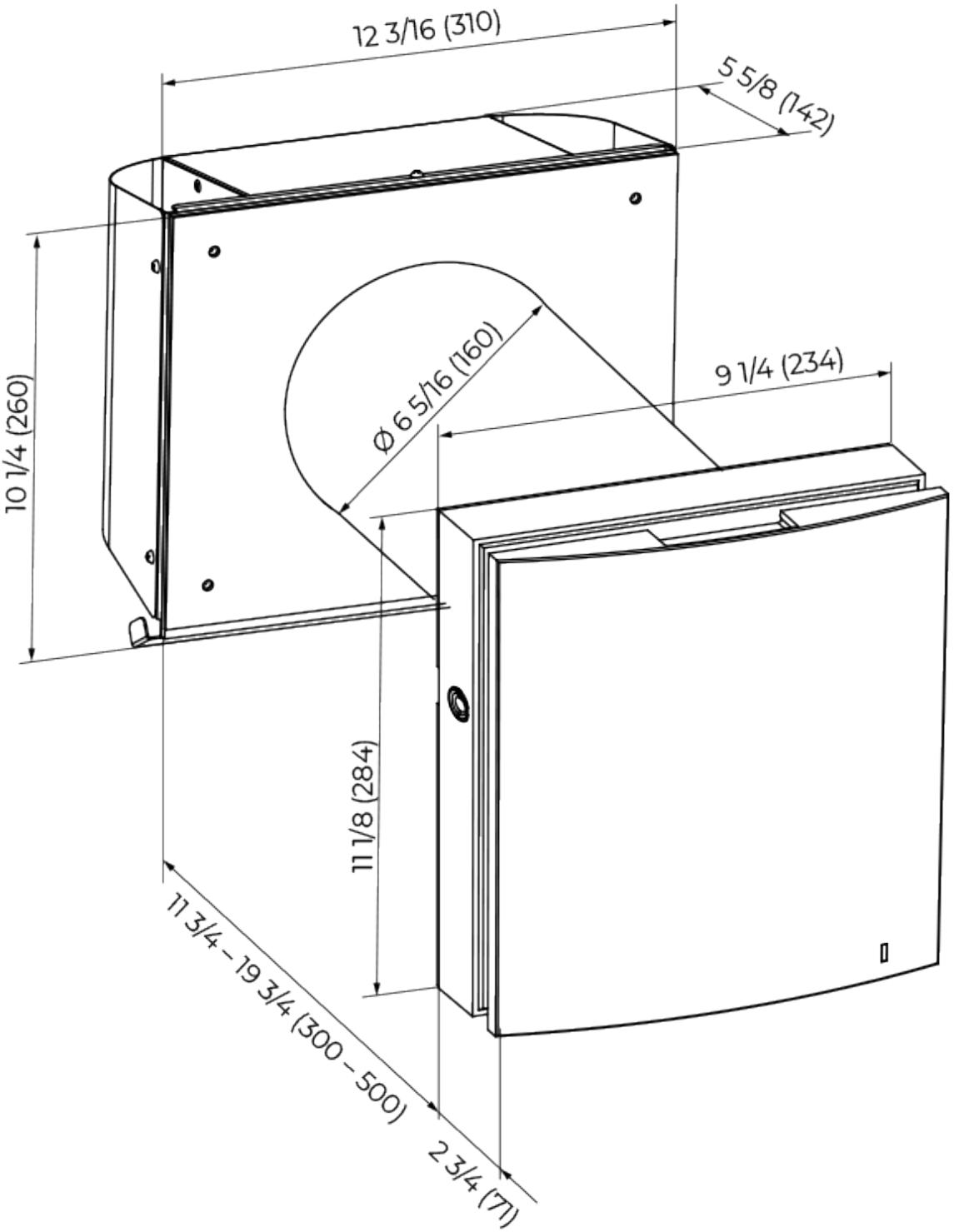
12 3/16 (310)
5 5/8 (142)
10 1/4 (260)
Ø 6 5/16 (160)
9 1/4 (234)
11 1/8 (284)
11 3/4 - 19 3/4 (300 - 500)
2 3/4 (71)