

Vento inHome S

Single-room ERV | 15 CFM | Wi-Fi

- Heat exchanger type: Reversible
- Heat exchanger material: Ceramic
- Filter: MERV 5 (optionally MERV 8, MERV 13 filters)
- Sound-insulated casing
- Enthalpy heat exchanger
- Control: Built-in control panel, Remote Control
- Casing material: Plastic
- Humidity sensor

	Unit of measurement	Vento inHome S		
Phases	-	1		
Minimum supply voltage	V	100		
Maximum supply voltage	V	240		
Power supply frequency	Hz	50/60		
Rated power	W	1.10	2.00	3.40
Maximum unit current	A	0.03	0.04	0.05
Air flow in ventilation mode	CFM	9	21	30
Air flow in heat recovery mode	CFM	4	9	15
Rotation speed at 60hz	-	800	1300	1900
Sound level	Sones	0.6	1.2	1.8
Heat recovery efficiency, max	%	95		
Heat exchanger type	-	Reversible		
Heat exchanger material	-	Ceramic		
Filter	-	MERV 5 (optionally MERV 8, MERV 13 filters)		
Transported air temperature (max)	°C	40		
Transported air temperature (min)	°C	-20		
Ingress protection rating	-	IP24		
Minimum wall thickness	in	7 1/4		

Dimensions

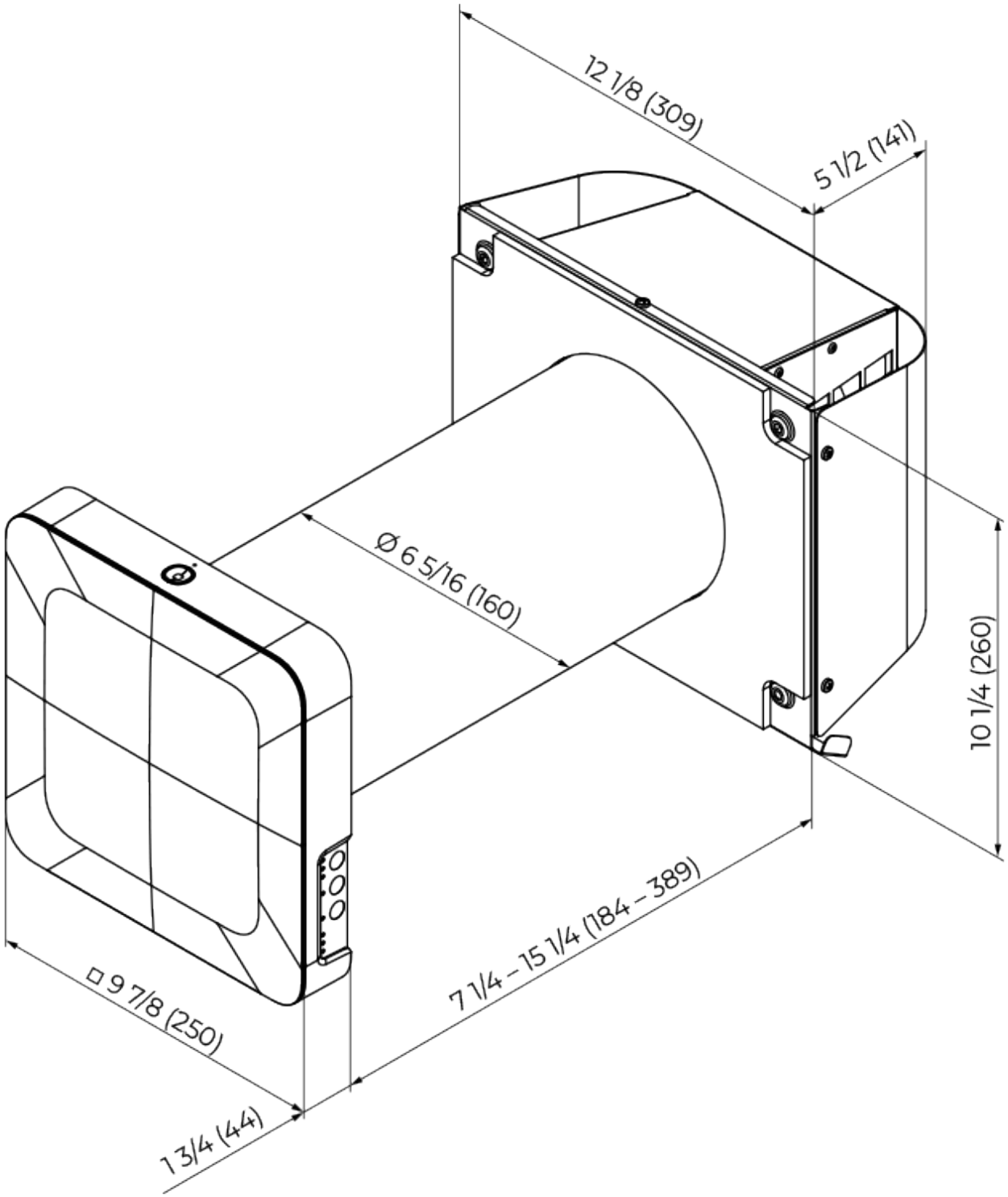
12 1/8 (309)
5 1/2 (141)
Ø 6 5/16 (160)
10 1/4 (260)
□ 9 7/8 (250)
7 1/4 – 15 1/4 (184 – 389)
1 3/4 (44)