INSTALLATION GUIDE

HEAT RECOVERY AND HEAT AND HUMIDITY RECOVERY AIR HANDLING UNIT

KOMFORT EC S S11 SERIES
KOMFORT EC SB S11 SERIES
KOMFORT EC SB-E S11 SERIES
KOMFORT EC SB-E S11 SERIES

Tools required

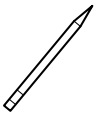

Pencil

Drill
Ø 6 mm (1/42")

Screwdriver

Dowel 4 pcs.

Screws 4 pcs.

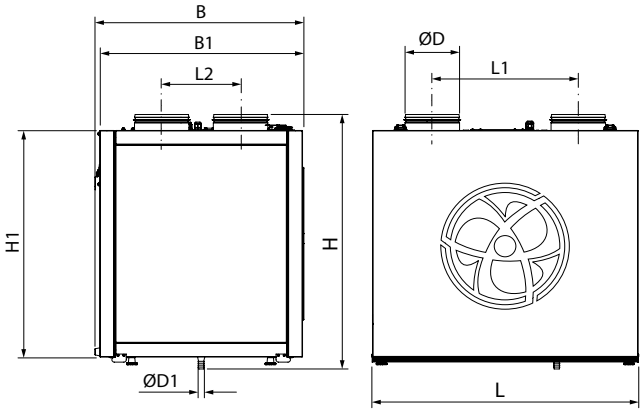

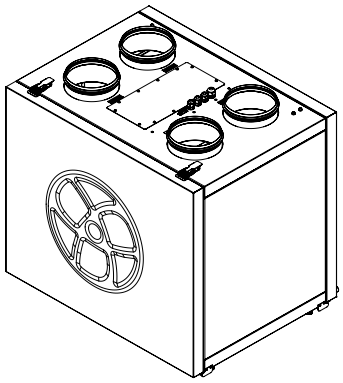

Model	Dimensions [mm]								
	Ø D	Ø D1	B	B1	H	H1	L	L1	L2
KOMFORT EC S160 S11	124 (4 4/5")	18 (5/7")	348 (13 5/7")	330 (13")	650 (1 1/5")	550 (21 2/3")	600 (23 3/5")	388 (15 2/7")	143 (5 3/5")
KOMFORT EC S1 160 S11	124 (4 4/5")	18 (5/7")	388 (15 2/7")	370 (14 3/5")	680 (26 6/8")	590 (23 2/9")	640 (25 2/9")	388 (15 2/7")	143 (5 3/5")
KOMFORT EC SB160 S11	124 (4 4/5")	18 (5/7")	348 (13 5/7")	330 (13")	690 (27 1/6")	580 (22 5/6")	600 (23 3/5")	388 (15 2/7")	143 (5 3/5")
KOMFORT EC S1B160 S11	124 (4 4/5")	18 (5/7")	385 (15 1/6")	370 (14 3/5")	690 (27 1/6")	620 (24 3/7")	640 (25 2/9")	388 (15 2/7")	143 (5 3/5")
KOMFORT EC SB350 S11	159 (6 2/7")	18 (5/7")	610 (24")	592 (23 2/6")	758 (29 4/5")	675 (26 2/3")	730 (28 3/4")	426 (16 3/5")	230 (9")
KOMFORT EC S1B350 S11	159 (6 2/7")	18 (5/7")	488 (19 2/9")	475 (18 6/9")	760 (30")	673 (26 2/4")	70 (28 3/4")	426 (16 3/5")	190 (7 2/5")
KOMFORT EC S2B350 S11	159 (6 2/7")	18 (5/7")	465 (18 2/7")	451 (17 5/6")	737 (29")	634 (25")	735 (29")	426 (16 3/5")	190 (7 2/5")
KOMFORT EC SB550 S11	198 (7 4/5")	18 (5/7")	741 (29 1/6")	722 (25 2/5")	758 (29 4/5")	675 (26 3/5")	828 (32 3/5")	493 (19 2/5")	284 (11 1/5")
KOMFORT EC S2B550 S11	198 (7 4/5")	18 (5/7")	566 (22 2/7")	550 (21 2/3")	737 (29")	634 (25")	810 (31 4/5")	493 (19 2/5")	259 (10 15")

Unit mounting

THE UNIT MUST BE MOUNTED BY A QUALIFIED EXPERT ONLY, PROPERLY TRAINED AND HAVING THE REQUIRED TOOLS AND MATERIALS.

FS1 HUMIDITY SENSOR MOUNTING AND CONNECTION

The FS1 humidity sensor is not included in the scope of delivery and should be ordered separately. The humidity sensor must be installed prior to unit mounting.

Install the humidity sensor through the extract spigot into the mount located in the extract section of the casing. Then connect the humidity sensor contact socket to the respective contact socket on the control unit, refer the wiring diagram.

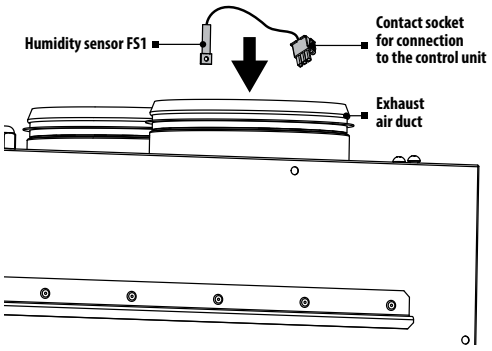

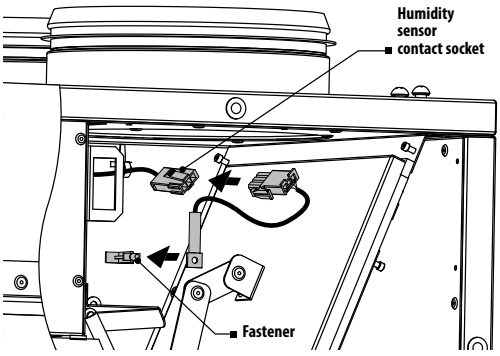

EVH HEATER MOUNTING AND CONNECTION

The EVH pre-heater is not included in the delivery and is available on a separate order.
The heater is rated for connection to single-phase AC 230 V/50 (60) Hz.
The heater is designed for mounting in the air duct connected with the intake spigot of the unit.
The heater and the air handling unit must be connected via the cable with the DB-9M connectors through the DB-9F connectors on the unit and on the heater.

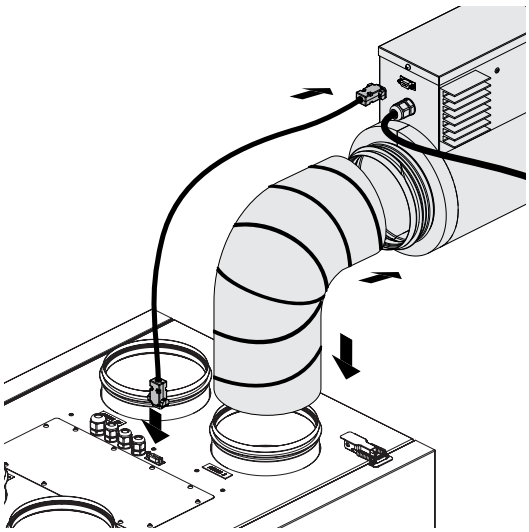

SERVICE SIDE CHANGE

Make sure of the correct unit service side selection. Unit mounting position should enable free excess to the service panel for maintenance and service operations.

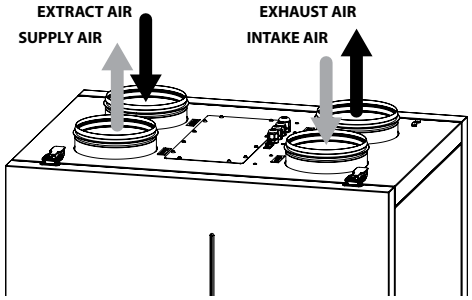

Left-handed modification

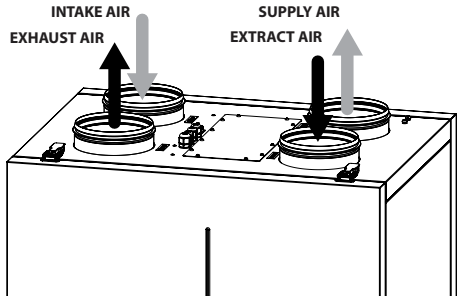

Right-handed modification

Service side change for unit mounting:

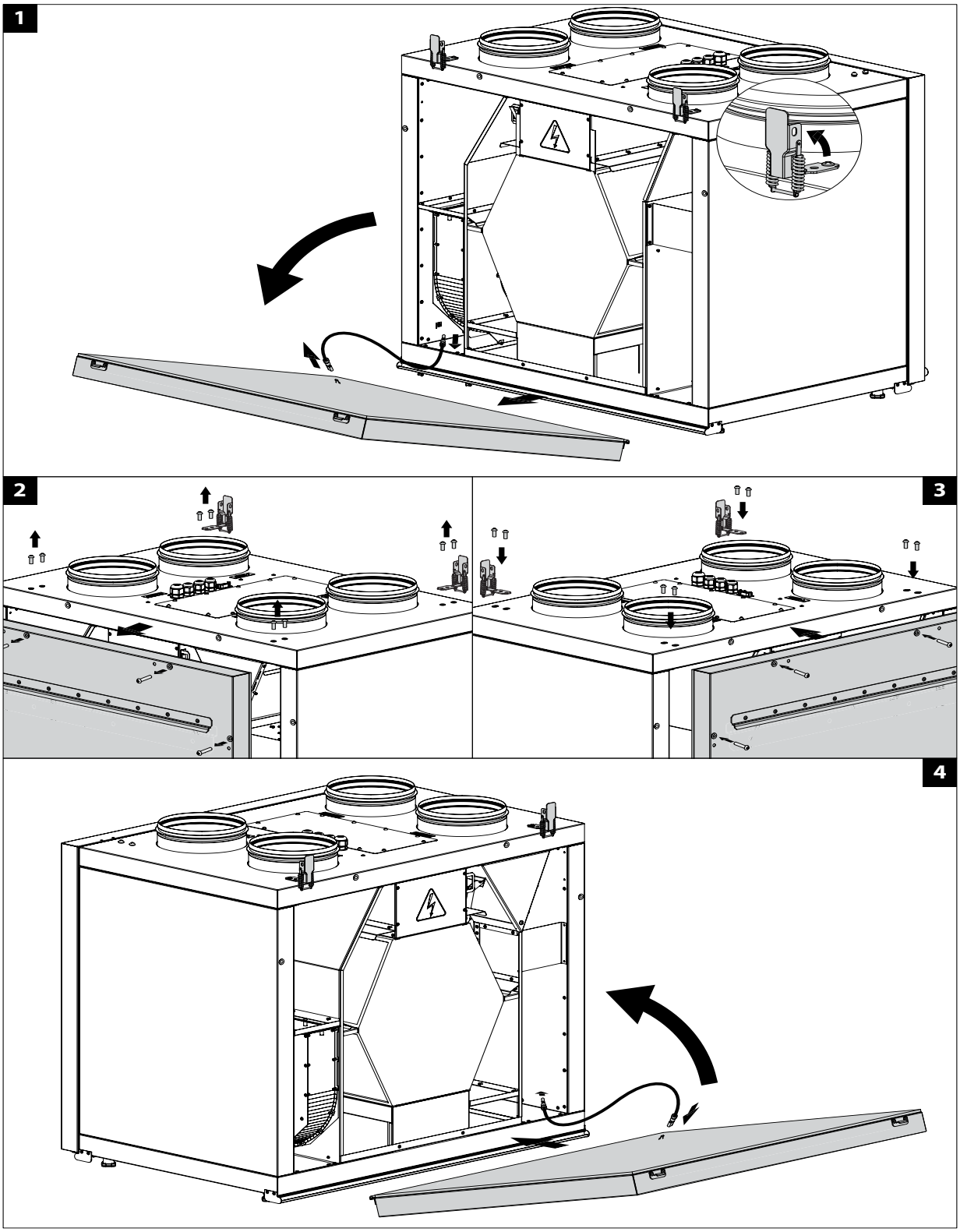

UNIT MOUNTING

To attain the best performance of the unit and to minimise turbulence-induced air pressure losses while mounting connect the straight air duct section to the spigots on both sides of the unit.

Minimum straight air duct length:

- equal to 1 air duct diameter on intake air spigot.
- equal to 3 air duct diameter on supply air spigot.

If the air ducts are not connected or the connected air ducts are too short cover the spigots with a protecting grille or other protecting device with mesh width not more than 12.5 mm (3/6") to prevent uncontrollable access to the fans.
While installing the unit ensure convenient access for subsequent maintenance and repair. The unit must be mounted on a plane wall. Mounting the unit to an uneven surface can lead to the unit casing distortion and operation disturbance.

Unit wall mounting

Fasteners for wall-mounting are not included into delivery set and should be ordered separately. While selecting fasteners consider the material of the mounting surface as well as the unit weight. For details, refer Technical Data. Fasteners for unit mounting should be selected by Customer Service technician.
Fix the wall-mounted hook at the required height and hang the unit on the hook.

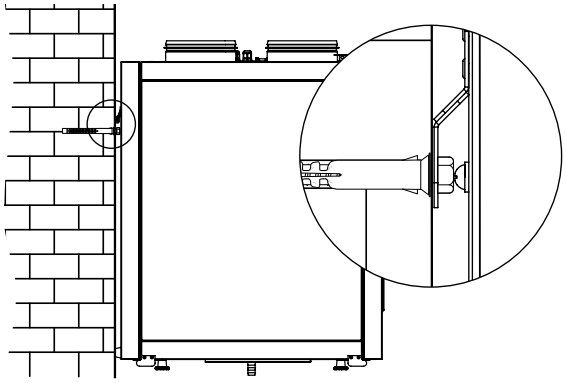

Unit floor mounting

Install the unit on the pre-set floor supports, minimum 150 mm (6") height, to ensure sufficient access for the drain pipe connection to the U-trap and for condensate drain system mounting.

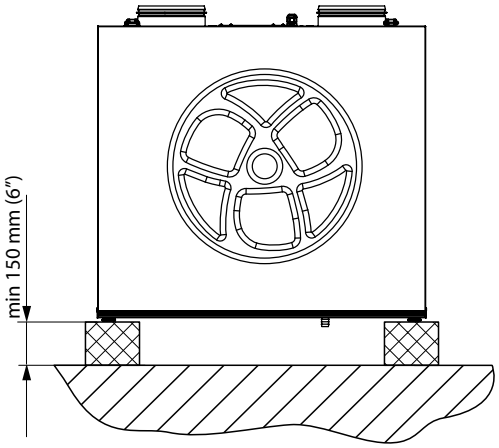

WALL-MOUNTED CONTROL PANEL INSTALLATION

Fixing methods for control panel wall mounting: wall surface mounting and wall flush mounting.
Example of wall flush mounting using a junction box is shown in the control panel user's manual. The junction box and the mounting kit must be purchased separately.

Condensate drainage is required for the unit series KOMFORT EC SB S11 and KOMFORT EC S S11.
The hole for the drain pipe is at the bottom of the unit. Remove the plug from the hole, open the service panel and install the drain pipe from the delivery set into the hole, then connect the drain pipe to the sewage system using the SG-32 U-trap kit (available upon separate order). The pipe slope downwards must be at least 3°.

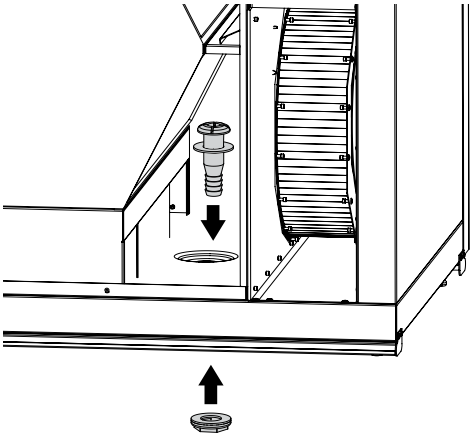

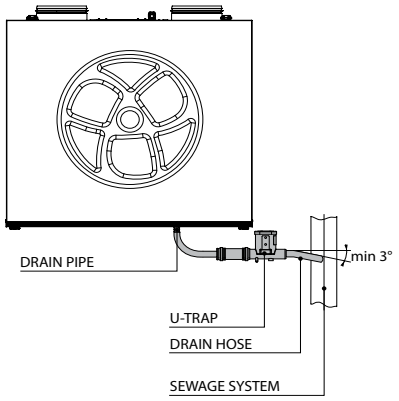

Connection to power mains

DISCONNECT THE UNIT FROM POWER SUPPLY PRIOR TO ANY ELECTRIC INSTALLATION OPERATIONS. INSTALLATION SHALL ONLY BE PERFORMED BY A PROFESSIONAL ELECTRICIAN QUALIFIED FOR UNASSISTED OPERATIONS WITH ELECTRICAL INSTALLATIONS UP TO 1000 V AFTER CAREFUL STUDY OF THE PRESENT USER'S MANUAL.
THE RATED ELECTRICAL PARAMETERS ARE STATED ON THE RATING PLATE. ANY TAMPERING WITH THE INTERNAL CONNECTIONS IS PROHIBITED AND WILL VOID THE WARRANTY.

The unit is rated for connection to a single-phase ac 230 V / 50–60 Hz. The unit shall be connected to power supply by means of insulated, durable and thermal-resistant cords (cable, wires). Connect the unit to power mains using the pre-wired power cord with the Euro Plug XP. Connection is made through the external automatic circuit breaker with magnetic trip integrated into the fixed wiring system. The rated current of the circuit breaker must not be below the unit current consumption, refer to the Technical data. The external circuit breaker position must ensure unhampered access for emergency shutdown of the unit.

Connect the cables to the control unit using the electric lead-ins on the top of the unit and make the electric connections through the terminal block X1, located in the control unit, in compliance with the external connections wiring diagram.

Access to the control board of the control unit

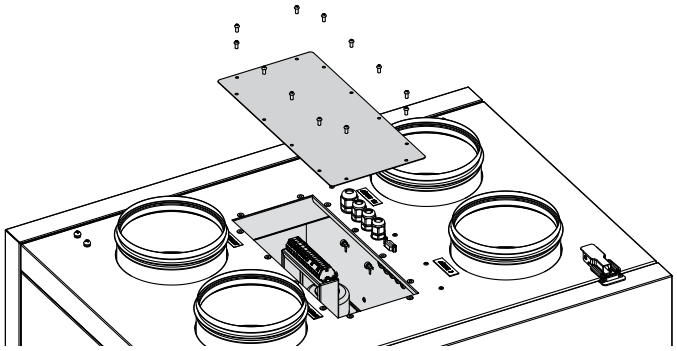

External connection wiring diagram

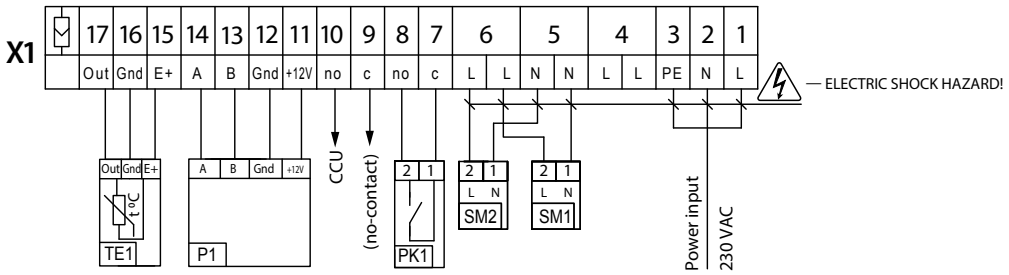

Design.	Description	Type	Wire**
CCU*	DX cooler	N0	2x0,75 mm²(5/64"x1/86")
SM1*	Supply air damper actuator	LF230	2x0,75 mm²(5/64"x1/86")
SM2*	Exhaust air damper actuator	LF230	2x0,75 mm²(5/64"x1/86")
PK1*	Contact from fire alarm panel	N0	2x0,75 mm²(5/64"x1/86")
P1	Control panel		
TE1	Outdoor temperature sensor		